DIFRENT
RENTING & USED TRUCKS

YOUR PARTNER IN MOBILITY

DAF 530 FT SUPER SPACE CAB ZF INTARDER

TECHNICAL INFORMATION

Construction	Standard tractor
Price	€ 26.500,-
Year	2020
Date 1st registration	2020-09-24
Id	0G321288
Vin	XLRTEH4300G321288
Axle configuration	4x2
Wheelbase	380 cm
Transmission	Automatic
Mileage	630.900 km
Fuel	Diesel
Emissionclass	Euro 6
Power	390 kW (530 PK)
Cylinder capacity	12.902 cc
Number of cylinders	6
General state	Very good
Technical state	Very good
Optical state	Very good

DAF XF 530 FT SUPER SPACE CAB ZF INTARDER 4x2

Referentienummer: 0G321288

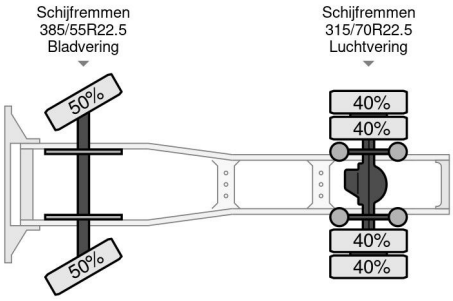

ACCESSORIES

• ABS • Adaptive Cruise Control • Air conditioning • Aluminium fuel tank • ASR (Anti-Slip Regulation/Traction Control) • Central locking • Cruise control • Disc brakes • Electrically operated windows • Fog lights • Intarder • Lane departure warning-system • Power steering • Radio en audiosystem • Refrigerator • Roof spoiler • Speed limiter • Stability control • Twin fuel tank • Vehicle heater

DESCRIPTION

XLRTEH4300G322117

Noorderlaan 175, B-2030 Antwerpen
Tel.: +32 (0)3 383 25 82
Email: info@dif-rent.be